Residential Stairways & Handrails

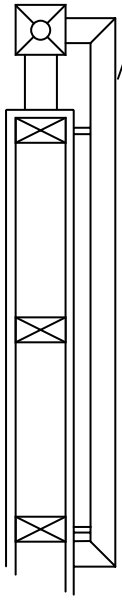

Handrail Ends Shall Be Returned To Walls Or Newel Posts

4 ½ Inch Maximum

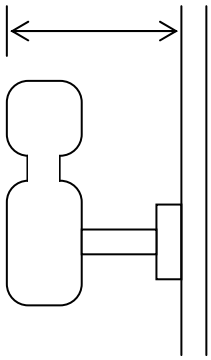

Not Acceptable

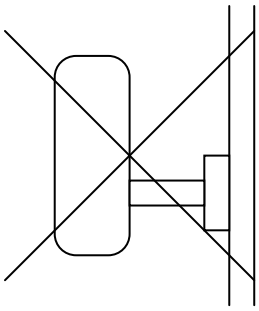

1 ½ Inch Minimum

1 ¼ Inch Minimum To 2 5/8 Maximum

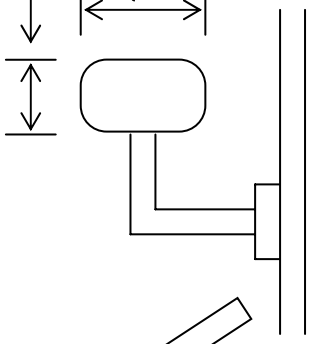

Handrails Shall Be Continuous The Full Length Of The Stairs With 3 Or More Risers On At Least One Side Of The Stairway

Handrails Shall Be Placed Not Less Than 34 Inches Or More Than 38 Inches Above The Nosing Of The Treads.

9 Inch Minimum Tread

4 Inch Minimum To 8 ¼ Inch Maximum Riser

Nosings Of ¾ Inch Minimum To 1 ¼ inch Maximum Required On Stairways With Solid Risers And Treads Less Than 11 Inches

Headroom In All Parts Of The Stairway Shall Not Be Less Than 6 Feet, 8 Inches Measured Vertically From The Sloped Plane Adjoining The Tread Nosing Or From The Floor Surface Of The Landing Or Platform.

Stairways With A Total Rise Of More Than 30 Inches May Have Open Risers Provided The Opening Is Less Than 4 Inches

Enclosed Accessible Space Under Stairs Shall Have Walls, Under Stair Surface And Any Soffits Protected On The Enclosed Side With ½ Gypsum Board